WASHBASIN

Washbasin CS, square, 500 mm, with tap hole, with overflow

DE: Waschtisch CS, eckig, 500 mm, mit Hahnloch, mit Überlauf
FR: Lavabo CS, rectangle, 500 mm, percé un trou, avec trop-plein
IT: Lavabo CS, rettangolare, 500 mm, con foro per rubinetto e troppopieno
NL: Wastafel CS, hoekig, 500 mm, met kraangat, met overloop

PRODUCT DETAILS	
Product code	LW1215CKE
GTIN (EAN)	40 50663 09488 1
Size	w:500×d:450×h:167 (mm)
Weight	12,7 kg
Colour	White
Material	Ceramic
Technologies	CEFIONTECT

Weights and measurements shown may be subject to small variations or are indicative.
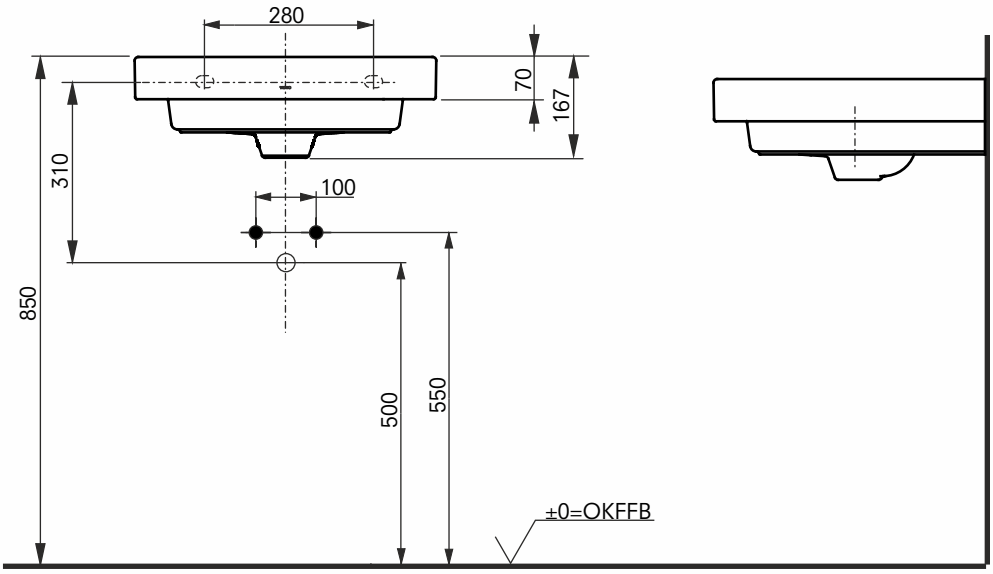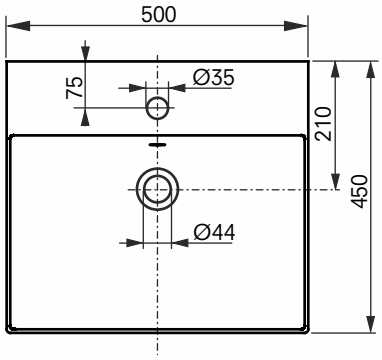
TECHNICAL DRAWINGS